LIBRARY
URT
DEM
WOEL

ACCIDENT ANALYSIS AT RAILROAD-HIGHWAY GRADE CROSSINGS IN URBAN AREAS

MAY 1969 – NUMBER 11

BY

W.D. BERG

J.C. OPPENLANDER

JHRP

JOINT HIGHWAY RESEARCH PROJECT

PURDUE UNIVERSITY AND

INDIANA STATE HIGHWAY COMMISSION

4.4-C (120)

Technical Paper

ACCIDENT ANALYSIS AT RAILROAD-HIGHWAY GRADE CROSSINGS IN URBAN AREAS

TO: J. F. McLaughlin, Director
Joint Highway Research Project

May 6, 1969

File No:8-5-9

FROM: H. L. Michael, Associate Director
Joint Highway Research Project

Project No:C-36-591

The attached Technical Paper "Accident Analysis at Railroad-Highway Grade Crossings in Urban Areas" has been accepted for publication by the ACCIDENT ANALYSIS & PREVENTION JOURNAL. The paper has been authored by W. D. Berg and J. C. Oppenlander, both former members of our staff. The paper summarizes the research of Mr. Berg conducted for his MSCE degree under the direction of Professor Oppenlander. The Final Report of that research has already been presented to the Board.

The paper is submitted for approval of publication.

Respectfully submitted,

Harold L. Michael

Harold L. Michael
Associate Director

HLM:rg

Attachment

Copy: F. L. Ashbaucher
W. L. Dolch
W. H. Goetz
W. L. Grecco
G. K. Hallock
M. E. Harr
R. H. Harrell
J. A. Havers
V. E. Harvey
J. F. McLaughlin
F. B. Mendenhall
R. D. Miles
C. F. Scholer
M. B. Scott
W. T. Spencer
H. R. J. Walsh
K. B. Woods
E. J. Yoder

Digitized by the Internet Archive
in 2011 with funding from
LYRASIS members and Sloan Foundation; Indiana Department of Transportation

http://www.archive.org/details/accidentanalysis00berg

Technical Paper

ACCIDENT ANALYSIS AT RAILROAD-HIGHWAY GRADE CROSSINGS IN URBAN AREAS

by

W. D. Berg
Graduate Assistant in Research

and

J. C. Oppenlander
Research Engineer

Joint Highway Research Project

Project: C-36-59I

File: 8-5-9

Purdue University
Lafayette, Indiana
May 6, 1969

ACCIDENT ANALYSIS AT RAILROAD-HIGHWAY GRADE CROSSINGS IN URBAN AREAS

ABSTRACT

The purposes of this research investigation were to develop mathematical models that measure the relative safety or hazard of urban grade crossings and to establish a priority rating system, based on these models, for determining protection improvements in urban areas. The mathematical techniques of discriminant analysis and regression analysis were utilized to develop discriminant models with linearly assigned probabilities. These models permit potential hazard to be expressed as the probability that a grade crossing is accident prone. A grade crossing where a vehicle-train accident had occurred during a two-year period was considered as a representative member of the population of accident prone crossings. A location which had not experienced a vehicle-train accident for at least five years prior to the date of the field investigation was assumed as a representative member of the population of non-accident prone grade crossings. Data were collected at 295 accident locations and 281 non-accident locations in urban portions of the State of Indiana.

The best discriminant model is 74-percent successful in classifying the true group membership of the sample grade crossings. This model expresses potential hazard as a function of protective device, average daily highway traffic, average daily train traffic, degree of effective sight distance, and roadside distractions. A

methodology was developed for selecting a minimum level of grade crossing protection and for establishing priorities for the improvement of protection at urban railroad-highway grade crossings.

INTRODUCTION

Exposure to potential collisions between trains and motor vehicles at railroad-highway grade crossings throughout the United States has created a serious problem with regard to the convenience and safety of highway travel. This problem has grown tremendously during the past few decades because of the rapid growth in vehicle-miles of travel. Accidents which occur at these crossings, although a numerically small part of the overall highway accident problem, are usually severe and result in a relatively high number of deaths.

Possible solutions to the grade crossing problem have included better enforcement of laws and regulations which apply to motor vehicle drivers at grade crossings, improvement of the level of grade crossing protection, and construction of grade separations. Application of the latter two alternatives is economically limited. Based upon engineering principles, a feasible solution is to develop some type of priority rating system for the improvement of the level of grade crossing protection. However, criteria and warrants for protective devices have yet to be developed for application on a rational basis. The general warrants used by many states result in priority ratings based on subjective judgment and not on hazard. The objectives of this research investigation were to develop mathematical models that measure the relative safety or hazard of urban grade crossings and to establish a priority rating system, based on these models, for determining protection improvements in urban areas.

By applying the results of this research, it may be possible to substantially improve the safety of highway travel at urban railroad-highway grade crossings. The protection improvement warrants and priority rating system allow a systematic reduction of hazard at these grade crossings. In addition, the analytical procedures developed in this investigation can be applied as an effective tool for the analysis of other transportation safety problems.

PROCEDURE

Many previous railroad-highway grade crossing accident studies defined safety in terms of the frequency of accident occurrence during a given period of time. Grade crossing hazard was considered as directly related to the accident rate. This approach yielded accident prediction equations which were functionally related to various influencing variables. However, the equations achieved only limited success in accounting for the variation of vehicle-train accident rates. In these studies the actual accident rates for the sampled grade crossings exhibited very little variation even when ten- to twenty-year accident data were used.

Because past research efforts have achieved only a limited ability to predict grade crossing accident rates, a new approach was conceptualized for this investigation. The hypothesis assumed was that railroad-highway grade crossings can be classified as either accident prone or non-accident prone. If an accident were experienced during an arbitrary period of time, a grade crossing was considered as a representative member of the accident prone group. If a crossing did not experience an accident, it was classified as a representative member of the non-accident prone group. This approach permitted safety or, conversely, hazard to be assessed in terms of a dichotomous variable representing membership in either the accident prone or non-accident prone group. A two-year period, 1963 through 1964, was selected for investigation, and the study was limited to those railroad-highway grade crossings located within incorporated areas in the State of Indiana.

Data Collection

Many variables were selected for analysis to minimize the possibility of overlooking any statistically significant hazard predictors. These variables afforded a comprehensive consideration of such factors as weather conditions, roadside distractions, railroad and highway traffic and operational features, geometrics of the railroad, roadway, and grade crossing, and types of warning and protective devices.

Indiana State Police traffic accident reports for the years 1963 and 1964 were used as the data source for the 295 grade crossing accidents which occurred in urban areas during the selected two-year period. The grade crossings which experienced these accidents comprised the sample of accident locations. For statistical purposes it was desirable to select an approximately equal number of grade crossings representative of the non-accident group. The 281 non-accident locations were randomly chosen in the following manner.

1. The railroad track mileage in each incorporated area in the State of Indiana was measured on a county map.
2. Using random number tables, 281 numbers were selected from the numerical range of the cumulative scaled mileage. Each number represented a non-accident location to be investigated in a specific urban area.
3. All grade crossings in each designated urban area were then numerically ordered, and the required number of sample grade crossings was selected by using random number tables.

To reduce the possibility that a selected non-accident grade crossing was not a representative member of the non-accident prone group, it was specified that the location must not have experienced a vehicle-train accident for a minimum of five years prior to the date of field investigation. To ascertain if the above requirement was fulfilled, the local police department, railroad agencies, and nearest available residents to the crossing were questioned with respect to each proposed location. If an accident had occurred, the site was rejected, and a different grade crossing was randomly selected as a replacement.

Data for the sample grade crossings were obtained from field investigations, correspondence with railroads which operate within the State of Indiana, and the Indiana State Police traffic accident reports. Each grade crossing selected for investigation actually represented four possible collision paths between motor vehicles and trains. As a result, data were recorded for a single quadrant representing unique vehicle and train approach directions. At the accident locations the selected quadrant was the one in which the accident occurred. Quadrants at the non-accident locations were selected with respect to a repetitive ordering of geographically designated quadrants (NE, SE, SW, NW, NE, etc).

Analysis of the Data

Hazard was previously defined as being a problem of binary assignment; that is, a selected grade crossing was classified as a member of either the accident prone or non-accident prone group. Both groups were assumed to be characterized by a unique distribution of influencing variables. The purpose was to discriminate between the two groups with a minimum chance of misclassification.

Discriminant analysis techniques, which have been applied by The Port of New York Authority (1963) and Warner (1962) to the choice of mode problem in urban transportation planning, were conveniently adapted to the analysis of grade crossing hazard. By formulating a linear discriminant model of important explanatory variables, a statistical rule was available to indicate those discriminant scores, or hazard values, for which a given location can be classified as either accident prone or non-accident prone.

The linear discriminant model was initially defined as:

1. $F = a_o + \sum_{i=1}^{n} a_i X_i$

where F = discriminant score,

X_i = an explanatory variable,

a_o = constant,

a_i = constant coefficient, and

n = the number of explanatory variables.

For the discriminant model to be useful, it was necessary to choose coefficients which maximized the separation between the density functions representing expected discriminant scores for the accident prone and non-accident prone groups. However, the above model was restricted to the prediction of a dichotomous classification that is based on a critical F-score. It was not statistically possible to distinguish the relative association with either of the two groups. To indicate the change in likelihood of association with either group, linear probabilities were assigned to the above discriminant model under the following constraints:

$$\Pr \text{ observation is from accident prone group } = \begin{cases} 0, \text{ if } F < 0, \\ F, \text{ if } 0 \leq F \leq 1, \text{ and} \\ 1, \text{ if } 1 < F. \end{cases}$$

The linear relationship was selected because of its mathematical simplicity and its reasonable description of the sample data. This technique permitted the discrimination of hazard to be expressed as a continuous, rather than dichotomous, function of the explanatory variables. Thus, potential hazard was expressed as the probability of being classified as a member of the population of accident prone grade crossings.

The coefficients of the discriminant model which satisfied the above constraints were obtained by minimizing the expression:

$$2. \quad G = \sum_{j=1}^{m} (F_j - Y_j)^2$$

where $F_j = a_o + \sum_{i=1}^{n} a_i X_{ij}$,

$Y_j = 0$, if observation is from non-accident prone group,

$Y_j = 1$, if observation is from accident prone group, and

m = number of sample observations.

This operation maximized the separation of the average discriminant scores for the two groups relative to the variation of the actual discriminant scores within each group. The computational procedures of regression analysis provided a convenient method of solving the minimization problem.

The success of the discriminant model was defined as the ability to correctly assign group membership. This success was determined by applying the model to the study sample and then computing the percentage of correct classifications of the accident and non-accident grade crossings relative to a classification criterion of 50-percent probability of membership in the accident prone group.

As a check on the appropriateness of the linear assignment of probabilities, the sample locations were separated into ranges of similar discriminant scores. The proportion in each range whose true value belonged to the accident prone group was graphically compared to the linear probability curve described by the discriminant model. This comparison permitted a visual verification of the linear assignment of probabilities.

A methodology, based on the selection of a maximum tolerable accident prone probability, was developed to determine a minimum level of grade crossing protection. Maximum tolerable probability levels were related to the errors resulting from misclassification. These errors expressed the likelihood of overprotection or underprotection. Overprotection was defined as the probability that a non-accident prone grade crossing will be classified as a member of the accident prone group. Similarly, underprotection was defined as the probability that an accident prone grade crossing will be classified as a member of the non-accident prone group. The error probabilities were computed by assigning the sample observations to accident and non-accident prone groups and then determining the proportion of misclassifications in each group. The errors were functionally expressed as:

$$A = \frac{M_a}{N_n} \qquad \text{and,} \qquad B = \frac{M_n}{N_a}$$

where, A = probability of underprotection,

B = probability of overprotection,

M_a = number of accident locations which were assigned to the non-accident prone group,

M_n = number of non-accident locations which were assigned to the accident prone group,

N_a = total number of grade crossings assigned to the accident prone group, and

N_n = total number of grade crossings assigned to the non-accident prone group.

A chart was then developed to permit the selection of the maximum tolerable accident prone probability associated with any given error of underprotection. This chart was constructed by computing the probability of underprotection associated with various levels of the maximum tolerable accident prone probability. Each probability level represented a different criterion for assigning the group membership of the sample data.

RESULTS

The analysis of urban grade crossing hazard was restricted to locations protected by a painted crossbuck, reflectorized crossbuck, flasher, or gate. These 465 grade crossings consisted of 243 accident locations and 222 non-accident locations.

Development of the Discriminant Model

Several discriminant models with linearly assigned probabilities were developed by the mechanics of regression analysis. These models were formulated for various combinations of explanatory variables to obtain the most successful discriminant model capable of being evaluated from measurements that are readily and conveniently available to the engineer. The success of each model was assessed by determining the percentage of correct classifications for the sampled grade crossings. The basic classification criterion was a discriminant score equivalent ot the 50-percent probability of membership in the accident prone group. A probability less than 50 percent represents a greater likelihood of membership in the non-accident prone group.

The most practical and successful discriminant model was:

3. $$F = 0.41227 - 0.03276\, X_{87} + 0.02384\, X_{88} + 0.00728\, X_{96} - 0.02109\, X_{100} - 0.19494\, X_{101} - 0.52512\, X_{102} + 0.01281\, X_{104}$$

where, F = discriminant score,

X_{87} = line of sight ratio,

X_{88} = average daily traffic per 1000 - ADT/1000,

X_{96} = average number of trains per day - TPD,

X_{100} = presence of a reflectorized crossbuck (0 if absent, 1 if present),

X_{101} = presence of a flasher (0 if absent, 1 if present),

X_{102} = presence of a gate (0 if absent, 1 if present), and

X_{104} = sum of distractions (number of businesses and advertising signs, on both sides of the roadway, along a section extending 500 ft from the crossing to 200 ft beyond the crossing for one approach direction).

Potential hazard, or the probability of membership in the accident prone group, was related to the discriminant model under the following constraints:

$$4.\quad \Pr[\text{observation is from accident prone group}] = \begin{cases} 0, & \text{if } F \quad 0, \\ F, & \text{if } 0 \quad F \quad 1, \\ 1, & \text{if } 1 \quad F, \text{ and} \end{cases}$$

where F = discriminant score.

This model was 74 percent successful in discriminating between the accident and non-accident grade crossings in the study sample.

The explanatory variables appearing in the discriminant model represent easily measured predictors of grade crossing characteristics. The line of sight ratio is a function of maximum actual train speed, angle of intersection, speed limit of the roadway, and the actual corner sight angle. The average daily traffic and the average trains per day variables are measures of relative exposure to potential collisions. The sum of distractions variable measures the number of possible roadside distractions along the roadway on both sides of the crossing. Each type of protective device is represented in the discriminant model. To calculate the potential hazard at a location with a given type of protection, the remaining protection variables are assigned a value of zero. Because the painted crossbuck represents

the lowest form of protective device, only the remaining three protective devices appear as variables in the model.

The line of sight ratio represents the ratio of the actual corner sight angle to the minimum desirable corner sight angle. The actual corner sight angle is defined as the angle at which a motorist can first view an approaching train when the vehicle is at a distance from the crossing equal to the minimum stopping sight distance. The stopping sight distance is determined for the posted speed limit of the roadway. The minimum desirable corner sight angle is defined as the minimum angle, for the same location described above, at which a motorist can first view the fastest approaching train and bring his vehicle to a stop in advance of the tracks before the train, traveling at a constant speed, reaches the crossing.

The geometry of the line of sight ratio is shown in Figure 1, where:

V_c = assumed vehicle speed for a given posted speed limit - mph,

SSD = minimum stopping sight distance - feet,

D_b = braking distance - feet,

t_1 = perception-reaction time - seconds,

t_2 = time required for a driver to bring his vehicle to a stopped position within the minimum stopping sight distance - seconds,

V_t = speed of fastest train - mph,

D_t = distance traveled by fastest train - feet,

ϕ = angle of intersection - degrees,

θ = actual corner sight angle - degrees, and

Δ = minimum desirable corner sight angle - degrees.

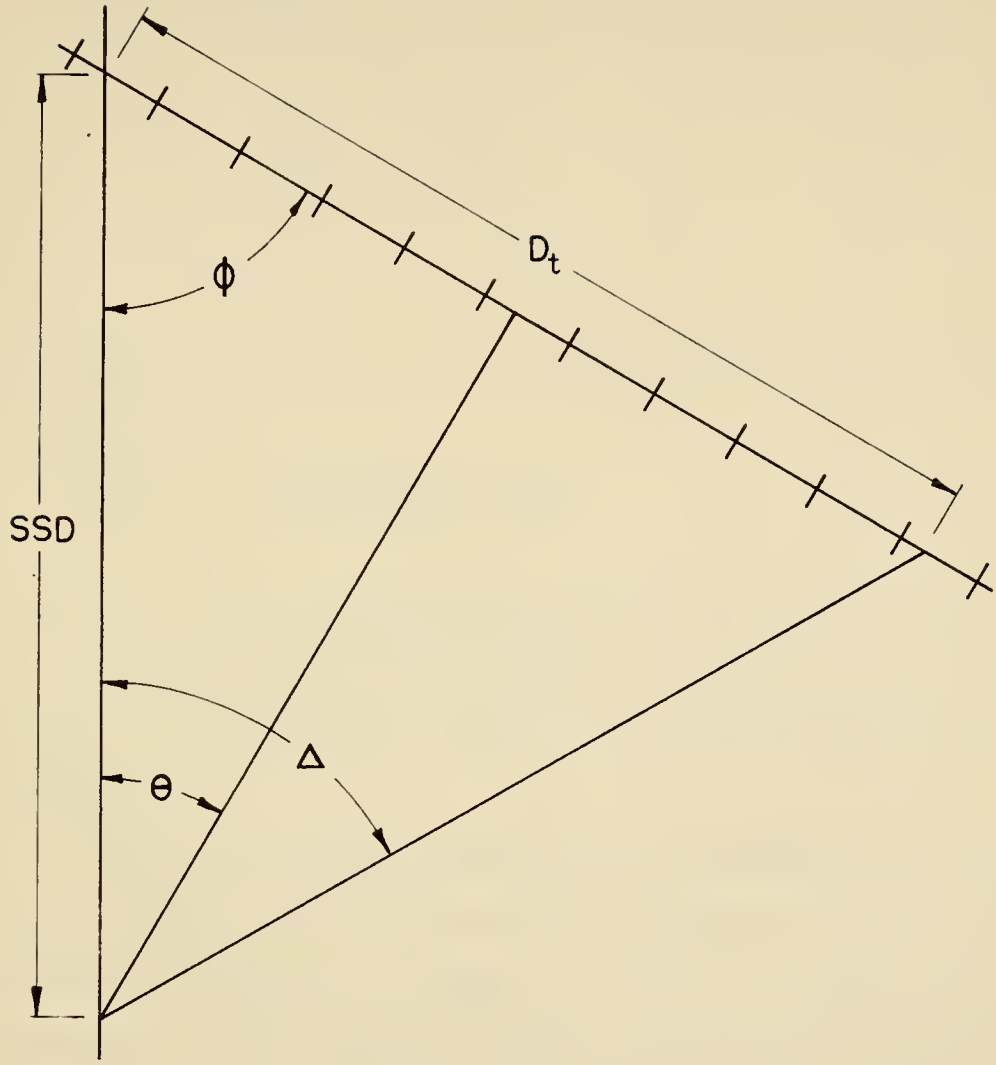

FIGURE 1. GEOMETRY OF THE CORNER SIGHT TRIANGLE

for this generalized configuration, the time and distance relationships are as follows:

$$t_2 = t_1 + \frac{2\ D_b}{1.47\ V_c} \qquad \text{or}$$

$$t_2 = 2.5 + \frac{2\ D_b}{1.47\ V_c}\ , \text{ and}$$

$$D_t = 1.47\ V_t\ t_2$$

Therefore, by the sine law, the minimum desirable corner sight angle is expressed as:

$$\frac{\sin\ \Delta}{D_t} = \frac{\sin\ (180 - \phi\ - \Delta\ )}{SSD}$$

the determination of Δ requires a trial and error solution of the above expression. The line of sight ratio is then equivalent to the actual corner sight angle divided by the minimum desirable corner sight angle.

Graphs were prepared to facilitate the determination of the line of sight ratio as well as the minimum desirable corner sight angle. The set of curves shown in Figure 2 is one of these graphs and is applicable to grade crossings where the posted speed limit of the roadway is 20 mph. The dashed line illustrates the solution for a 90 - deg intersection angle, a value of 50 mph for the speed of the fastest train, and an actual corner sight angle of 50 deg.

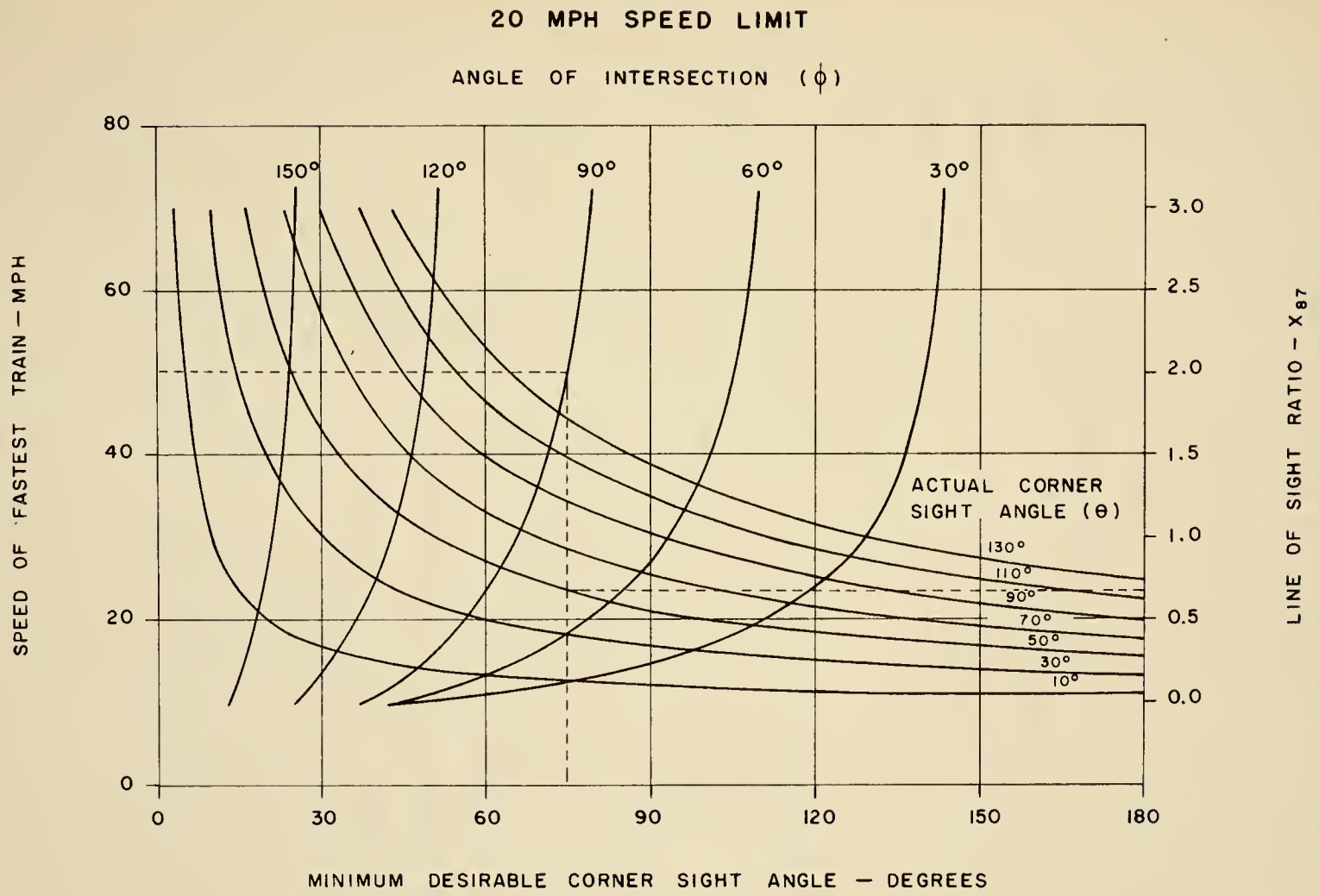

FIGURE 2. LINE OF SIGHT RATIO CURVES

The nature of the association between the explanatory variables and potential hazard is indicated by the respective algebraic signs in the discriminant model. The practical appeal of the model is that these empirically derived results agree with accepted a priori relationships. Thus, the presence of any one of the protection devices always decreases the potential hazard. Similarly, as sight conditions improve, the line of sight ratio increases, and the potential hazard is decreased. Finally, an increase in average daily traffic, average number of trains per day, or the number of distractions causes an increase in the potential hazard.

The relative effectiveness of each type of protective device is indicated by the magnitude of the respective variable coefficients appearing in the discriminant model. These coefficients, as shown in Table 1, represent the reduction in potential hazard (probability of membership in the accident prone group) for a particular type of protective device. The hazard reductions were expressed relative to the level of protection offered by the painted crossbuck. As evidenced by the coefficients, the reflectorized crossbuck offers a very small improvement over the painted crossbuck. This improvement is probably due to the benefits of reflectorization realized during the hours of darkness. However, the automatic flasher is almost ten times more effective than the reflectorized crossbuck, while gate protection is approximately 2.5 times more effective than flasher protection.

TABLE 1

RAILROAD-HIGHWAY GRADE CROSSING
PROTECTION COEFFICIENTS

Protective Device	Relative Protection
Painted Crossbuck	0.000
Reflectorized Crossbuck	0.021
Flasher	0.195
Gate	0.525

Appropriateness of the Discriminant Model

As a check on the appropriateness of the discriminant model with linearly assigned probabilities, the function was graphically compared with actual probabilities of group membership for the sample data. The graph of the linear discriminant model and the points representing the computed actual probabilities for the sample grade crossings are illustrated in Figure 3. The relatively close scatter of points about the line indicates that the discriminant model with linearly assigned probabilities can offer a reasonable estimate of potential hazard.

Criteria for Minimum Levels of Protection

If the potential hazard at a specific grade crossing can be defined as the probability of its membership in the accident prone group, criteria can be established for judging the minimum level of grade crossing protection. This procedure involves the specification of a maximum tolerable accident prone probability for urban railroad-highway grade crossings. The minimum level of protection is then defined as the lowest level of protection yielding a probability less than or equal to the tolerable value.

The selection of a maximum tolerable accident prone probability is dependent on several factors. Consideration must be given to misclassification errors which result in overprotection or underprotection. The error which leads to underprotection may be considered more critical. By decreasing the maximum tolerable accident prone probability, the chance of underprotection is reduced. However, a disadvantage of lowering the maximum tolerable accident prone

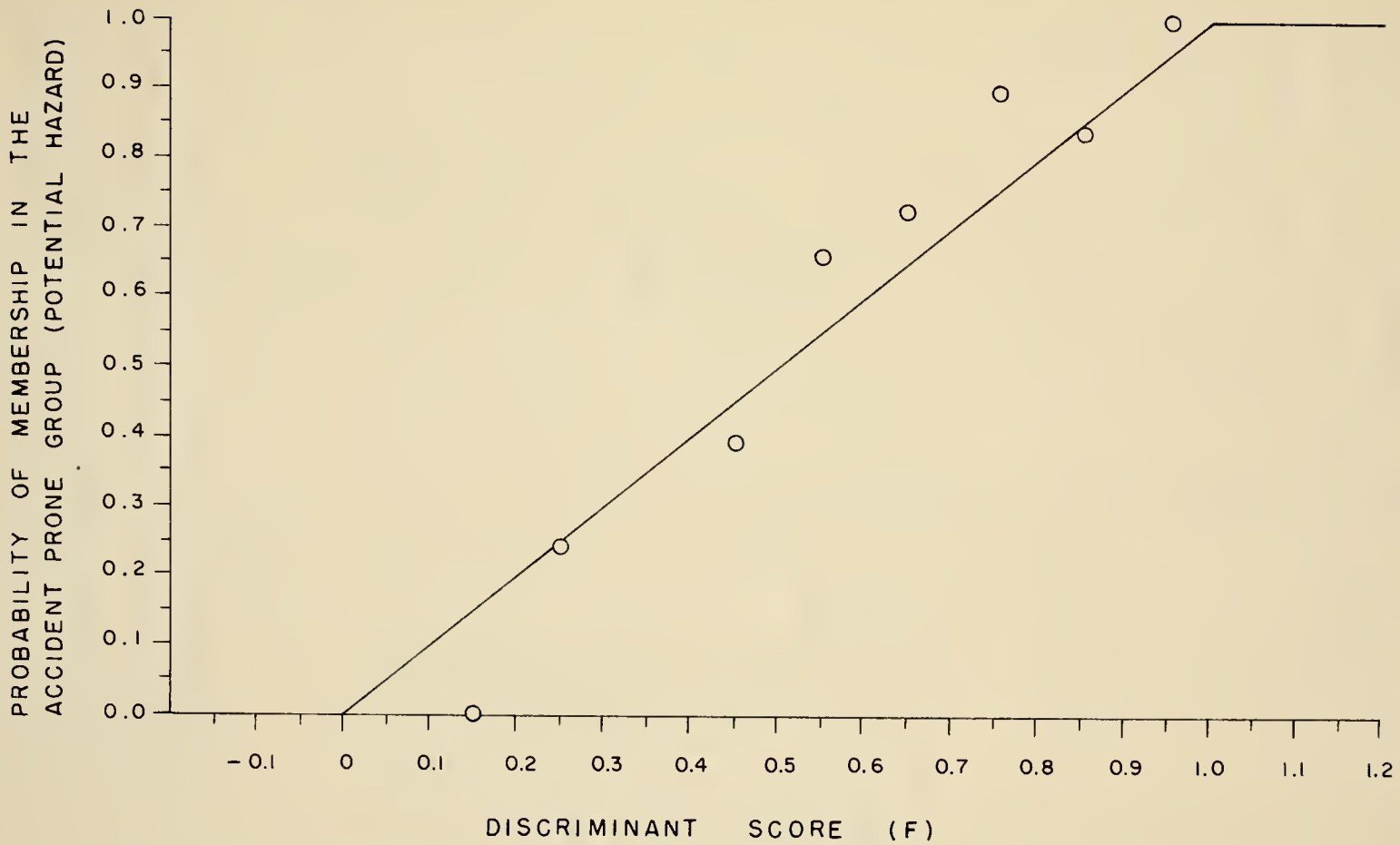

FIGURE 3. COMPARISON OF THE LINEAR ASSIGNMENT OF PROBABILITIES WITH THE ACTUAL PROBABILITIES FOR THE SAMPLE DATA

probability is the increased number of grade crossings which require a higher level of protection. The greater protection requirements are directly related to the increased chance of overprotection and to the decreased chance of underprotection. If limited funds are available for the improvement of grade crossing protection, a decrease in the maximum tolerable probability also results in a reduction in the number of improvement projects which can be financed. This reduction is due to the substantially greater cost of the higher types of protective devices.

The final selection of a maximum tolerable accident prone probability must revert to subjective judgment of an acceptable and economically realistic error of underprotection. The curve shown as Figure 4 was developed to aid engineers and public officials in making this decision. The error, or probability, of underprotection is plotted as a function of maximum tolerable accident prone probability. Utilization of the graph requires that an acceptable probability of underprotection be predetermined. This probability is then used to select the corresponding maximum tolerable accident prone probability which will serve as the criterion for determining minimum levels of grade crossing protection.

Minimum Levels of Protection

The specification of minimum levels of protection for urban railroad-highway grade crossings requires that a maximum tolerable accident prone probability be selected from Figure 4. The minimum level of protection is then specified as the lowest type of protective device which causes the potential hazard to be equal to or less then the

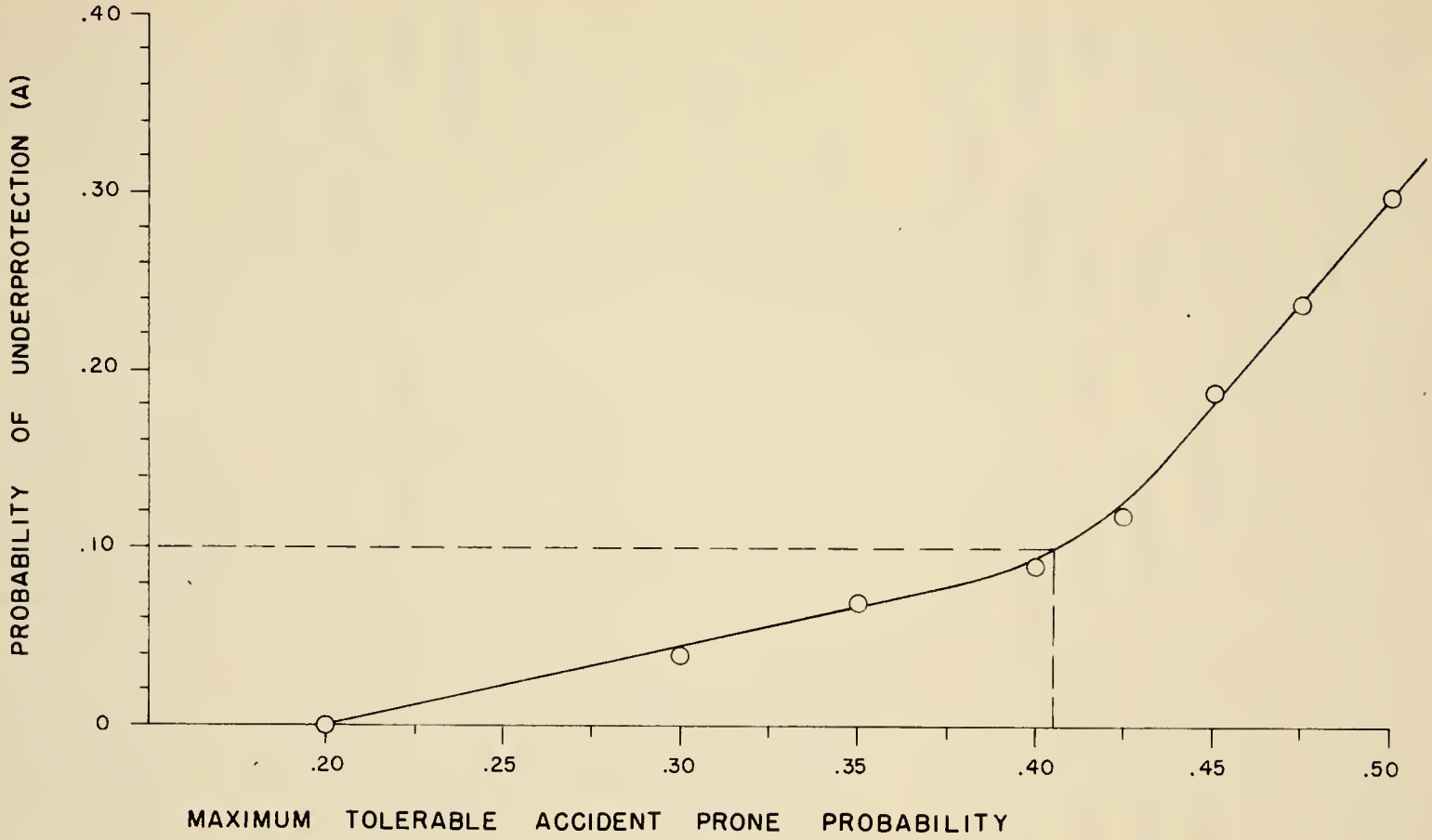

FIGURE 4. RELATION BETWEEN MAXIMUM TOLERABLE ACCIDENT PRONE PROBABILITY AND PROBABILITY OF UNDERPROTECTION

maximum tolerable value. The discriminant model can be solved directly to predict the accident prone probabilities associated with the various protective devices which are being considered for any grade crossing. The nomograph shown as Figure 5 can be used to facilitate the numerical evaluation of the discriminant model.

Because the sum of distractions and the line of sight ratio variables are referenced to one approach direction and one corner sight triangle, respectively, each grade crossing quadrant must be evaluated. The highest type of protection required in any quadrant is the recommended protective device for that particular grade crossing.

Protection Improvement Priorities

The discriminant model with linearly assigned probabilities also permits the establishment of protection improvement priorities based on potential hazard. Warranted grade crossing protection improvement projects can be ordered relative to their existing accident prone probabilities. The projects with the greatest potential hazard (probability of membership in the accident prone group) are then assigned the highest priorities for improvement. Priorities may be established for all deficient grade crossings as a group or for grade crossings which are categorized according to their recommended type of protective device.

Application of the Model

The results of this research can readily be applied by engineers who are responsible for protection control at urban railroad-highway grade crossings. The following example illustrates the procedure for evaluating the potential hazard of a grade crossing, for determining the minimum level of protection, and for establishing protection improvement priorities.

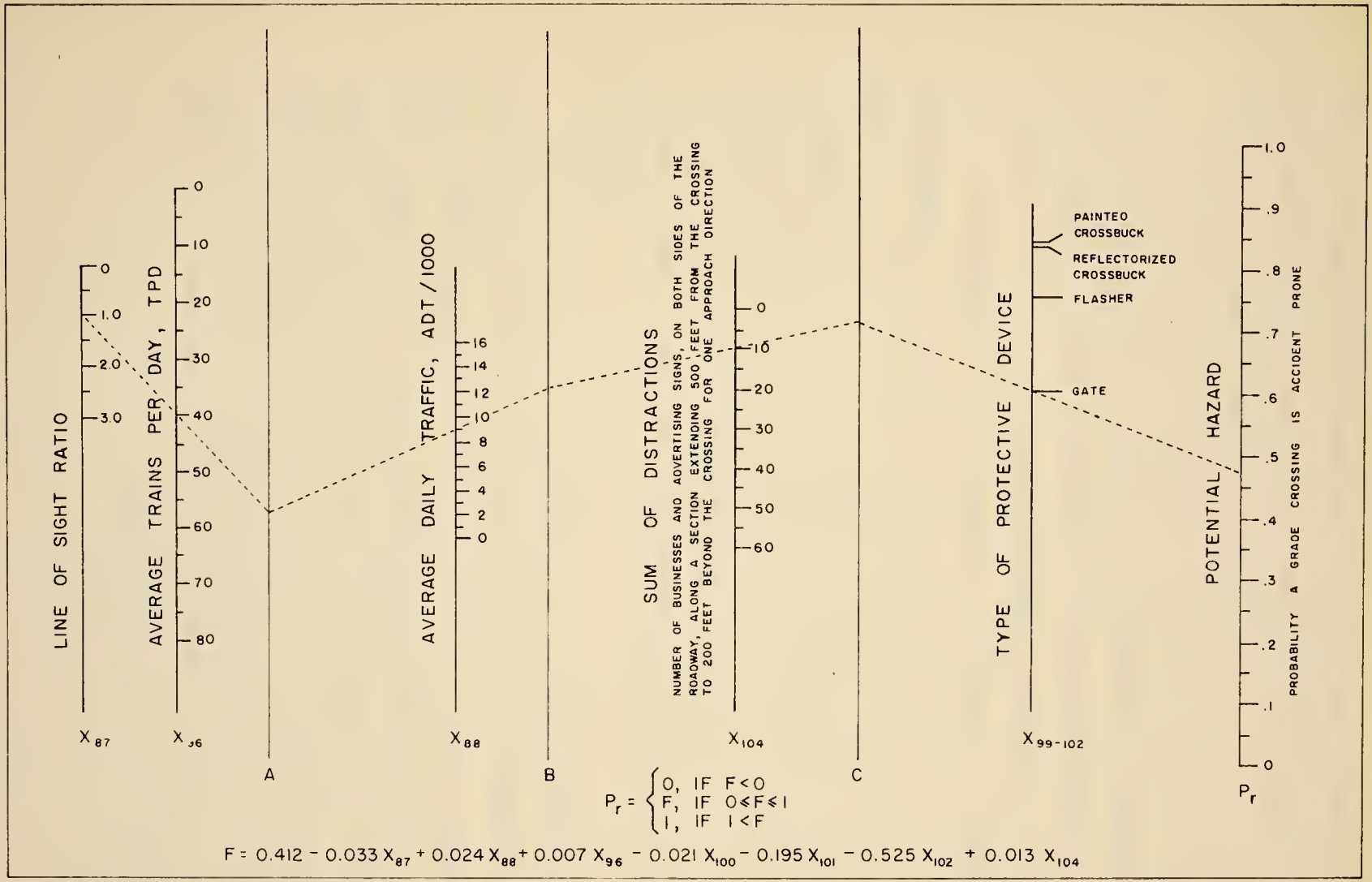

FIGURE 5. PROTECTION NOMOGRAPH - GRADE CROSSINGS LOCATED IN URBAN AREAS OF INDIANA

For a hypothetical municipality there are five railroad-highway grade crossings which are characterized by the data listed in Table 2. The potential hazard of each grade crossing quadrant is obtained by solving the protection nomograph in Figure 5.

The minimum level of protection at each crossing is a function of the maximum tolerable accident prone probability. Assuming that a 25-percent probability of underprotection has been specified as acceptable, the maximum tolerable probability from Figure 3 is 0.48. This value represents the criterion for determining the respective minimum levels of protection. The most hazardous quadrant at each grade crossing controls the selection of the recommended type of protection. The controlling quadrants are, respectively, A2, B3, C2, D2, and E3 for the five example crossings. Because the potential hazard for quadrants B3 and C2 are less than or equal to the maximum tolerable value, the existing protective devices are considered adequate.

The minimum levels of protection at the remaining three crossings are specified by using the protection nomograph to determine the lowest type of protective device which yields a potential hazard less than or equal to 0.48. The recommended protective devices for crossings A and E are a flasher and a gate, respectively. These devices would replace the painted crossbuck at A and the flasher at E. This improvement of crossing protection affords the following reductions in potential hazard for the controlling quadrants.

	Existing	After Improvement
A2	0.59	0.40
E3	0.65	0.32

TABLE 2

GRADE CROSSING DATA FOR EXAMPLE PROBLEM

Grade Crossing	Quadrant	ADT	TPD	Type of Protection	Sum of Distractions	Line of Sight Ratio	Potential Hazard
A		1,200	14	Painted crossbuck			
	1				5	0.67	0.58
	2				5	0.32	0.59
	3				3	1.38	0.53
	4				3	0.82	0.55
B		1,800	10	Flasher			
	1				8	0.61	0.41
	2				8	1.03	0.40
	3				13	0.70	0.48
	4				13	0.79	0.47
C		400	6	Reflectorized crossbuck			
	1				2	1.84	0.41
	2				2	1.28	0.43
	3				0	0.97	0.41
	4				0	1.06	0.41
D		5,200	24	Gate			
	1				31	0.36	0.57
	2				31	0.10	0.58
	3				19	0.12	0.43
	4				19	0.57	0.41

TABLE 2 (cont'd.)

Grade Crossing	Quadrant	ADT	TPD	Type of Protection	Sum of Distractions	Line of Sight Ratio	Potential Hazard
E		2,300	40	Flasher			
	1				5	0.10	0.62
	2				5	1.01	0.58
	3				8	0.21	0.65
	4				8	0.48	0.64

Because grade crossing D is presently protected with the highest type of protective device, an automatic gate, the construction of a grade separation may be warranted. However, the application of various traffic engineering techniques may reduce the chance of driver error in the vicinity of the crossing and thus permit a less costly improvement.

Protection improvement priorities can be established on the basis of the existing potential hazard. For this example, grade crossing E has the highest priority for improvement and is followed by grade crossings A and D, respectively.

This technique does not incorporate an economic analysis in ascertaining the effectiveness of various protection devices at railroad-highway grade crossings in urban areas. The discriminant analysis approach permits the selection of a protection device which reduces the potential hazard to some acceptable minimum level. Therefore, the decision-making parameter is the relative safety of the railroad-highway grade crossing.

CONCLUSIONS

The following conclusions concerning hazard at urban railroad-highway grade crossings in Indiana summarize the findings of this research investigation.

1. The development of a discriminant model with linearly assigned probabilities permitted potential hazard to be expressed as the probability that a grade crossing can be considered accident prone. This model related potential hazard to type of protective device, average daily highway traffic, average daily train traffic, a measure of effective sight distance, and a measure of roadside distractions.
2. The linear discriminant model was 74-percent successful in assigning the sample grade crossings into accident and non-accident groupings. Therefore, the model was considered to be a reliable predictor of potential hazard.
3. The suggested procedure for establishing a minimum level of protection was to determine the minimum protection requirement for each grade crossing quadrant relative to a selected maximum tolerable accident prone probability. The recommended protective device for that particular grade crossing was the highest type of protection required in any quadrant. Protection improvement priorities can be established on the basis of the existing potential hazard.

4. The relative effectiveness of the protective devices was measured by the coefficients of the protective device variables which appear in the discriminant model. These coefficients are indicative of the reductions in potential hazard relative to the level of protection offered by a painted crossbuck:

a.	Painted crossbuck	0.000
b.	Reflectorized crossbuck	0.021
c.	Flasher	0.195
d.	Gate	0.525

REFERENCES

American Association of State Highway Officials (1954). A Policy on Geometric Design of Rural Highways. Washington, D. C.

Association of American Railroads (1955). Recommended standards and practices for railroad-highway grade crossing protection. Bulletin No. 5. Washington, D. C.

Automotive Safety Foundation (1963). Traffic Control and Roadway Elements, Their Relationship to Highway Safety. Washington, D. C.

Berg W. D. (1967). Evaluation of safety at railroad-highway grade crossings in urban areas. MSCE Thesis. Purdue University, Lafayette, Indiana.

Bezkorovainy G. and Holsinger R. G. (1966). The use of stop signs at railroad crossings. Traffic Engineering Department, City of Lincoln, Nebraska.

McLaughlin W. A. (1960). Highway-railway grade crossing treatments. Canadian Good Roads Association, Technical Publication No. 13. Ottawa, Canada.

Newman D. G. (1965). An economic analysis of railway grade crossings on the California state highway system. Institute in Engineering - Economic Systems, Report EEP-16. Stanford University, Standord, California.

Schultz T. G. (1965). Evaluation of safety at railroad-highway grade crossings. Ph.D. Thesis. Purdue University, Lafayette, Indiana.

The Port of New York Authority Engineering Department (1963). Some techniques for the evaluation of ground service to air travelers. Report 63-5.

Warner S. L. (1962). Stochastic Choice of Mode in Urban Travel: A Study in Binary Choice. The Transportation Center at Northwestern University. Northwestern University Press, Evanston, Illinois.